Military Grade Rack Mount LCD

Rack Mount LCD

19"(9U)

RoHS COMPLIANT 2002/95/EC

Specifications

Model Name	R19L340-MLA2
Viewable Size Image	19"
Active Display Area(mm)	376.32(H)x301.06(V)
Pixel Pitch(mm)	0.294(H)x0.294(V)
Number of Pixels	1280x1024
Contrast Ratio	1000:1(typ.)
Display Color	16.7M (colors)
Brightness(cd/m²)	350(typ)
Viewing Angle(CR>=10)	-85~85(H);-80~80(V)
Synchronization Range Horizontal/Vertical	31.5~80.0KHz/60~75Hz
Recommended Resolution	1280x1024@60Hz, 75Hz
Signal Connector	15 pin D-Sub, 5 x BNCs, DVI-D, RS232
Power Source	AC100~240V, Universal,±10% DC 24V, ±10%(Optional)
Power Consumption	41W typical, normal operation
Power Management	VESA DPMS Compliant
Plug & Play	VESA DDC 1/2B
Optional Touch Screen	Resistive

- Anti-Corrosion Housing / Fanless
- Compliant with MIL-STD-810F
- Flush Rack / Rack Mount Mechanical Design
- Convenient On-Screen Display Controls
- AC built-in Power input / Isolation DC 24V Power input (Optional)
- Auto-Dimming and Dimming Controls
- Military Grade Power Connector Model JY27466
- Standard AR Glass
- EMI ITO Glass (Optional)
- 5-wire Resistive Touch with EMI Mesh Coating (Optional)

Environmental(MIL-STD810F Compliance)

Vibration	MIL-STD-810F Method 514.5
Humidity	MIL-STD-810F Method 507.4
Transit Drop	MIL-STD-810F Method 516.5
High Temperature	Storage:MIL-STD-810F Method501.4 Operation:MIL-STD-810F Method501.4
Low Temperature	Storage:MIL-STD-810F Method502.4 Operation:MIL-STD-810F Method502.4

Mechanical Drawing

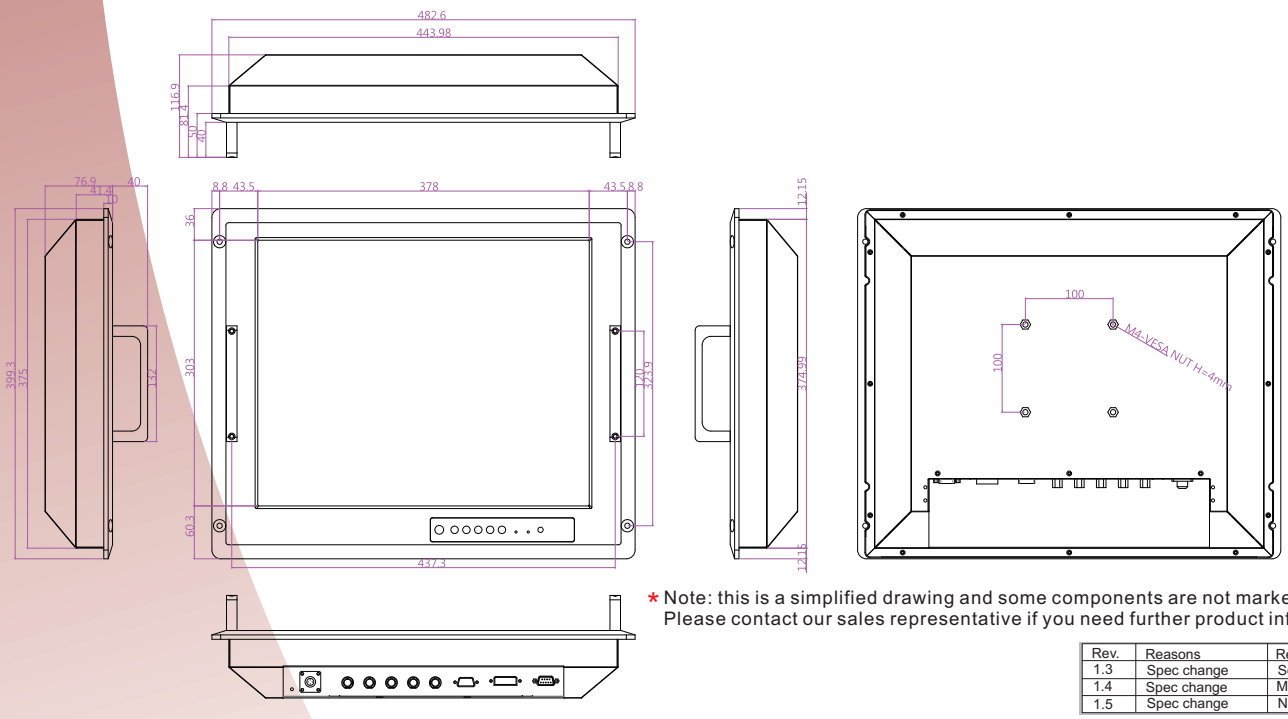

* Note: this is a simplified drawing and some components are not marked in detail. Please contact our sales representative if you need further product information.

Rev.	Reasons	Revised Date
1.3	Spec change	Sep-01-11
1.4	Spec change	May-16-12
1.5	Spec change	Nov-13-12